EXPERIMENTAL INSERTION

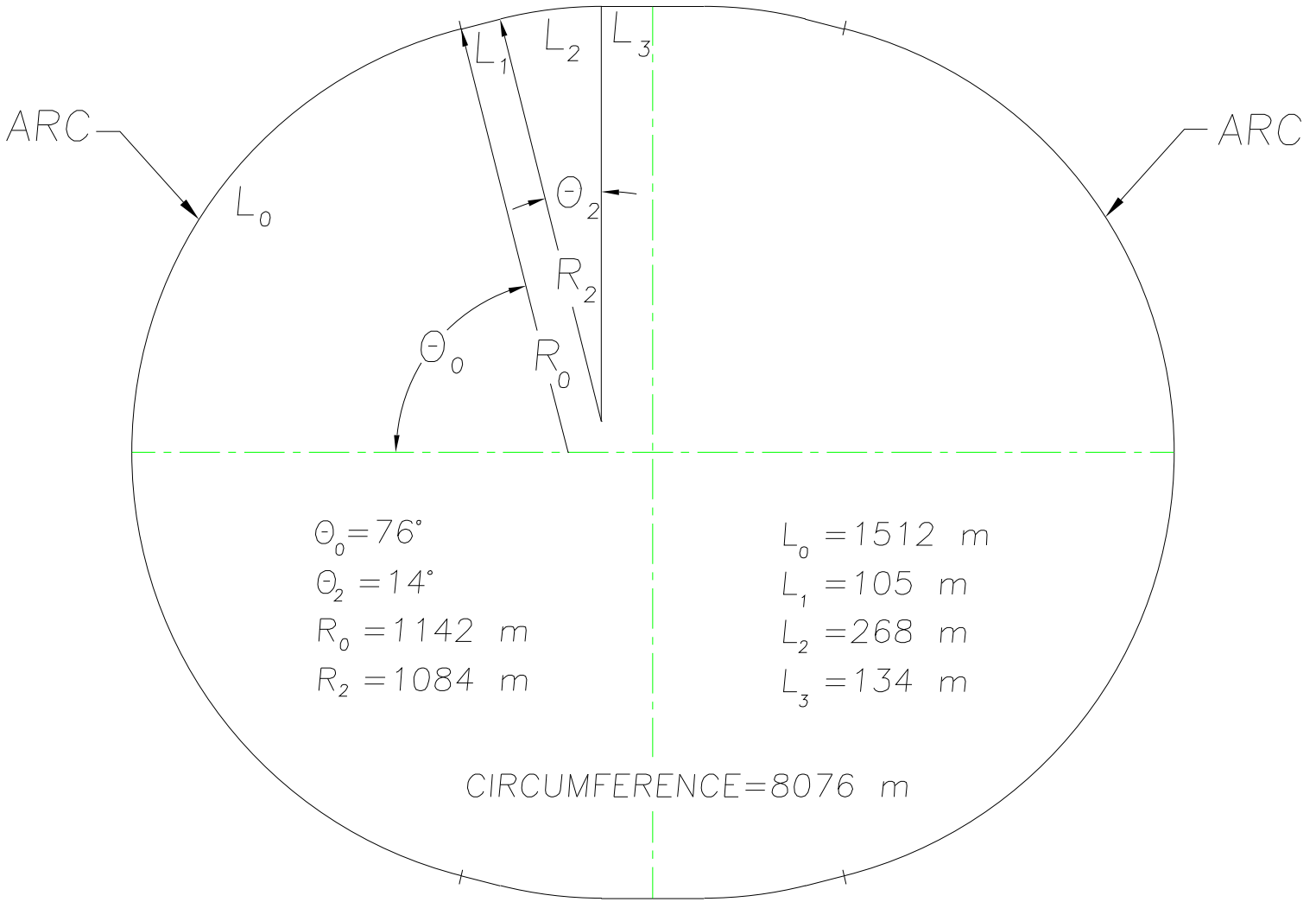

UTILITY INSERTION