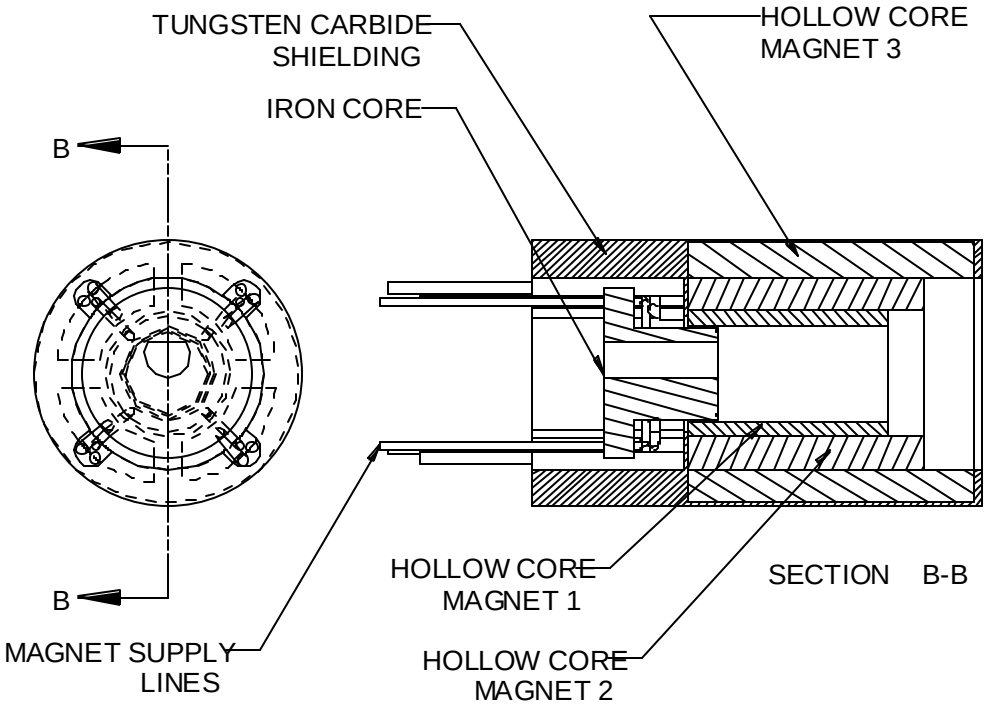
TUNGSTEN CARBIDE SHIELDING
HOLLOW CORE MAGNET 3
IRON CORE
B
B
HOLLOW CORE MAGNET 1
SECTION B-B
MAGNET SUPPLY LINES
HOLLOW CORE MAGNET 2