COLLIDER RING :*

- Highest possible bending magnet to maximize No. of turns in the ring before decay

β^*	$3\,mm$
σ_z	$3\,mm$
ϵ_n	$50\,\pi\,mm - mrad$
$\delta = \frac{\Delta p}{p}$	$0.12\,\%$
No. of turns	1000
No. muons	2×10^{12}
No. bunches	2
beam − beam tune shift	0.05

- Isochronous lattice

- IP Local Chromatic Correction is essential

*

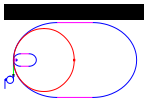

$\mu^+\mu^-$ COLLIDER

- Resistive wall impedance instability $\rightarrow$ *BNS damping* with rf quadrupoles is a possible solution

- Momentum compaction, $\alpha \approx 10^{-6}$

†

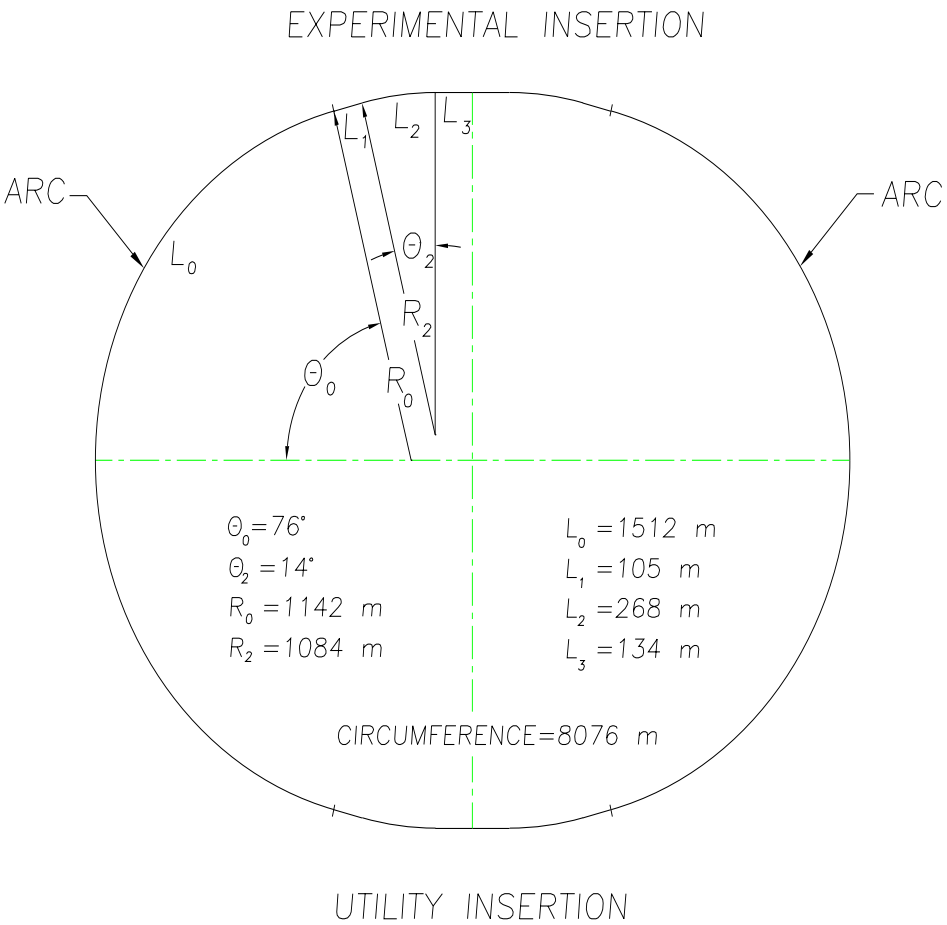

The complete collider ring layout (Garren)

- There are two lattices designed by A. Garren and Oide, neither is totally complete

- Oide's has shown a dramatic increase of the dynamical aperture (100 turns) by including

octupoles and decapoles in the chromatic correction section

- At Snowmass a new lattice was designed simpler and equally good properties (C. Johnstone and A. Garren)

‡